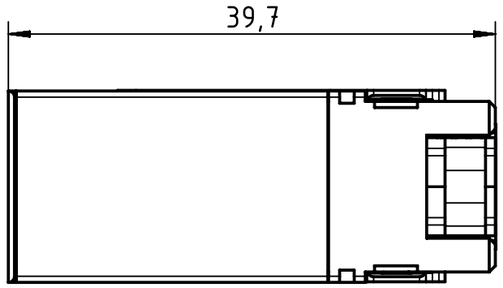

(2:1)

wire manager

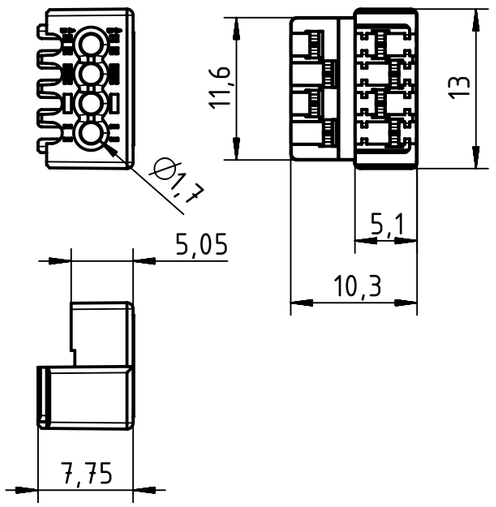

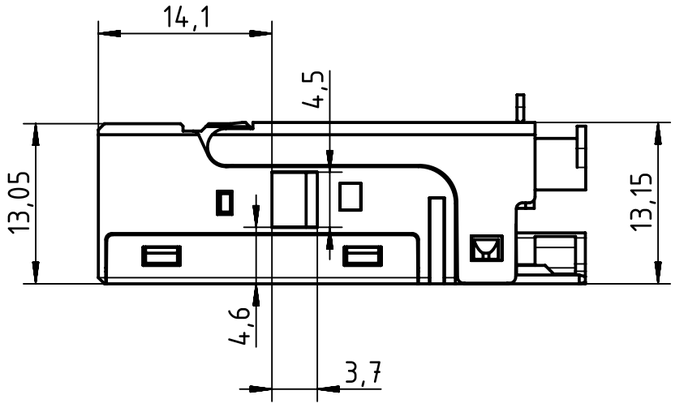

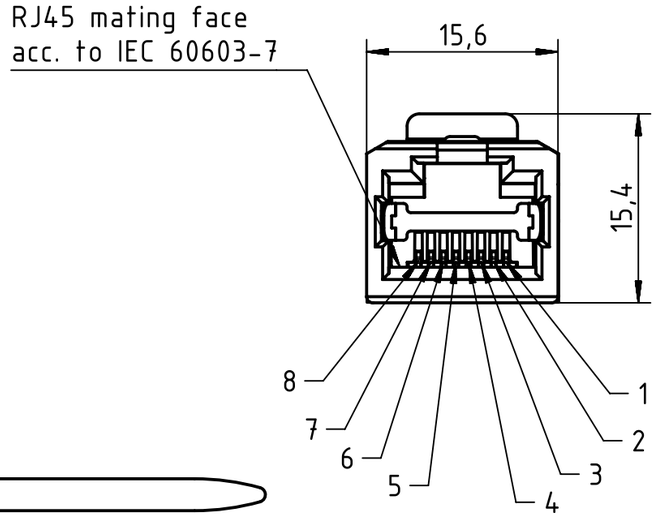

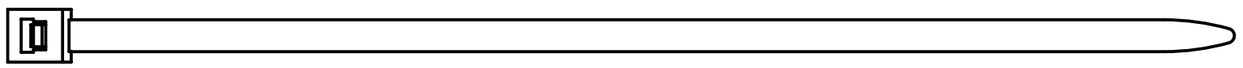

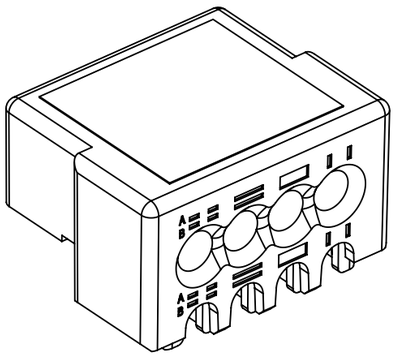

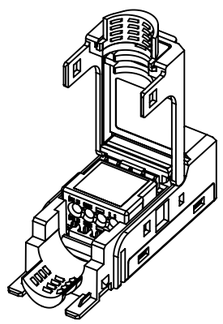

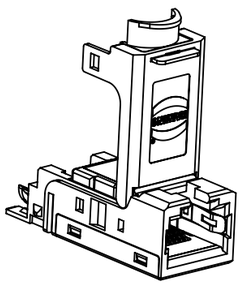

All Dimensions in mm Original Size DIN A3	Scale 2:1	Free size tol.		Ref. Sub.	
All rights reserved Department EL PD	Created by DEIMEL	Inspected by FERDERERA	Standardisation RUETERA	Date 2019-10-24	State Final Release
HARTING Electric GmbH & Co. KG D-32339 Espelkamp	Title Han-Mod RJ45 IDC cable jack 8P AWG 24-22				Doc-Key / ECM-Nr. 100564290/UGD/001/D 500000159250
	Type TB	Number 09 14 545 1562		Rev. D	Page 1/1

A3